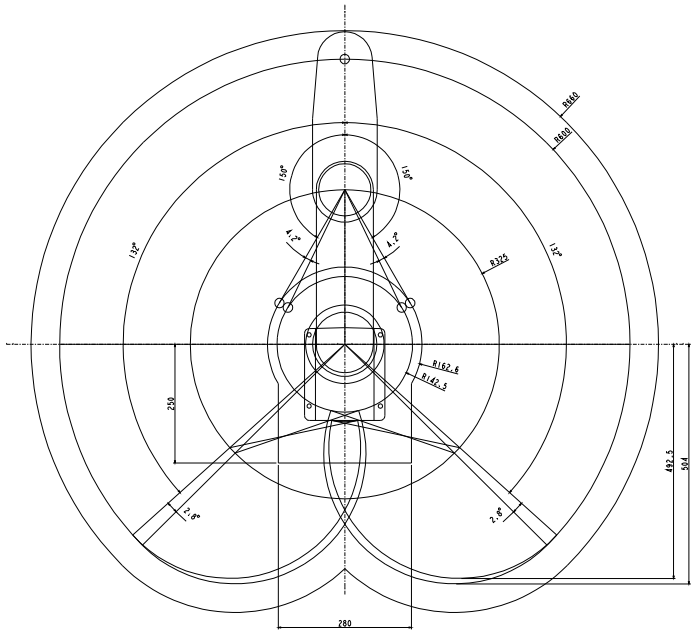

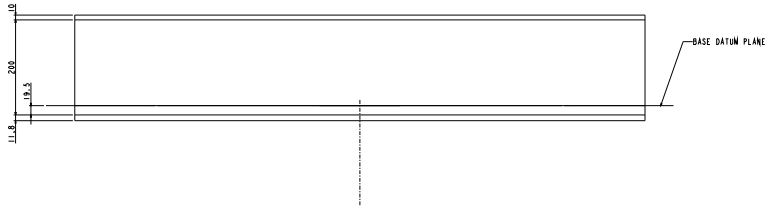

TECHNICAL No.		DESIGN No.					
				MATERIAL	--	FINISH LEVEL	--
				HEAT TREATMENT	--	CAST No.	--
				SURF TREATMENT	--	WEIGHT	-- kg
	RECOG.	CHECK	DESIGN	PART NAME		MODEL	T6
DSGN				RANGE OF T6-602S		R CODE	--
						CODE	**-00
TECH	**	**	--	SCALE 1:4 (ESTIMAT)	DESIGN DRAWING NO. T6-02	DRAWING NO. **-01	Rev. 00
ISSUED		TECH. DESIGN	No. No.	Drawing file name : T6-02 Model file name : T6-02(FRIDGE)			

EPSON