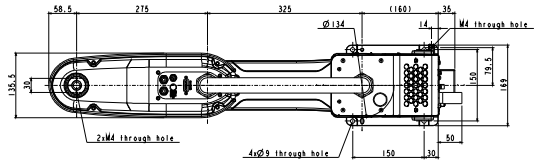

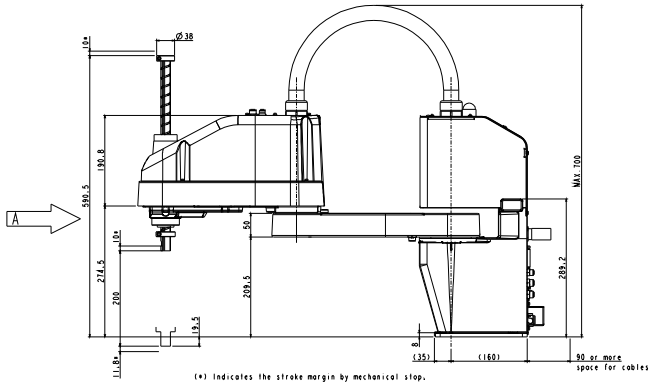

(*) Indicates the stroke margin by mechanical stop.

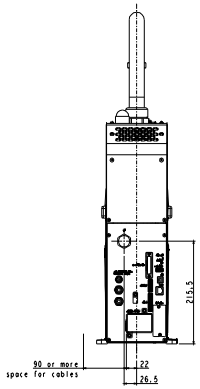

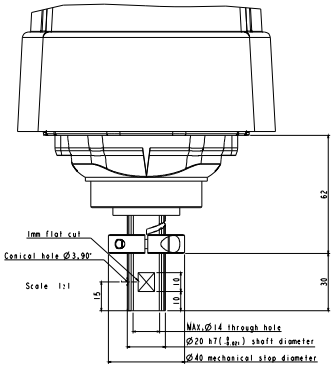

Ditail view from "A"
(Calibration point position of joints #3 and #4)

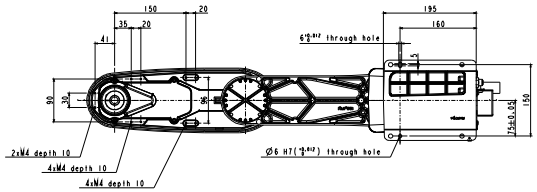

TECHNICAL No.		DESIGN No.					
				MATERIAL		FINISH LEVEL	
				HEAT TREATMENT		CAST No.	
				SURF TREATMENT		MASS	kg
RECORD	CHECK	DESIGN	PART NAME		MODEL	T6	
DRAWN			T6 External Dimention		N CODE		
					CODE	DO	
TECH			SCALE 1:4 (1:1mm)	DESIGN DRAWING NO. T6-01		DRAWING NO. 01	Rev. 00
ISSUED		TECH. No. DESIGN. No.	Drawing file name : T6.DWG Model file name : T6.MODEL(3D)				

EPSON